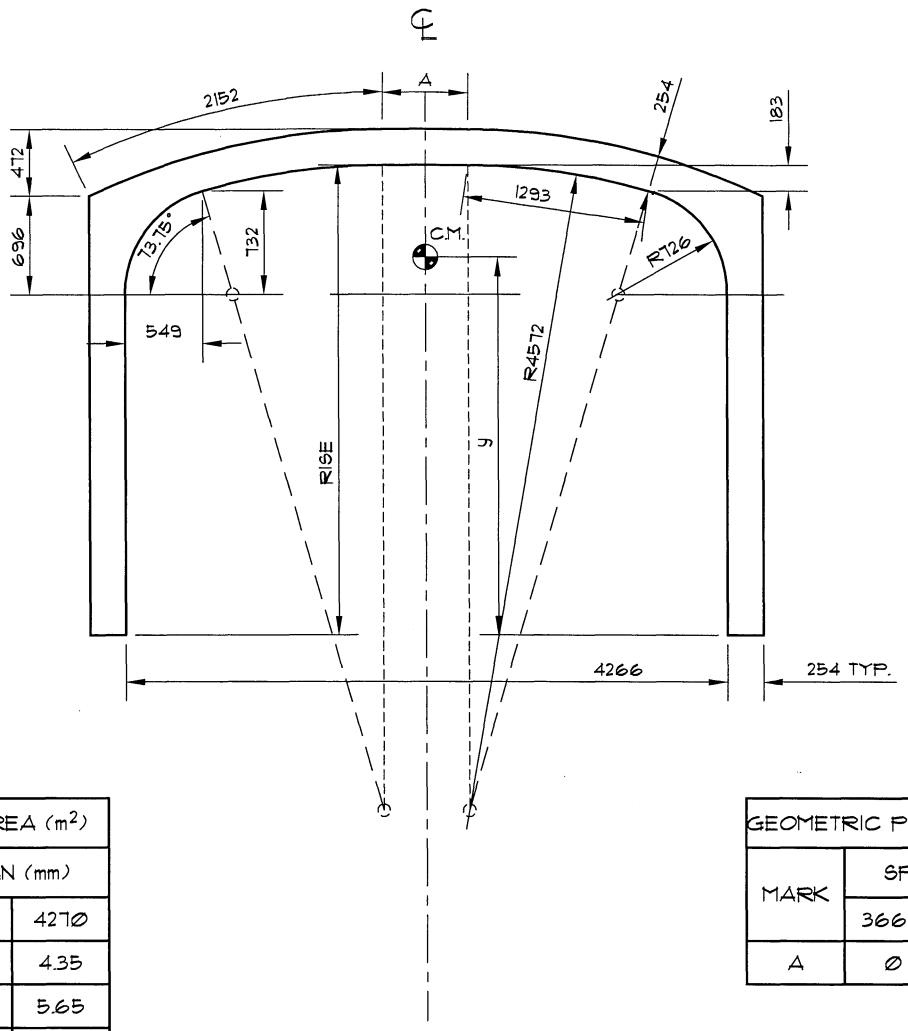

WATERWAY AREA (m^2)		
RISE	SPAN (mm)	
	3660	4270
1.22	3.90	4.35
1.52	5.00	5.65
1.83	6.15	6.95
2.13	7.25	8.25
2.44	8.35	9.55
2.74	9.45	10.85
3.05	10.60	12.15

GEOMETRIC PROPERTIES		
MARK	SPAN (mm)	
	3660	4270
A	0	610

WETTED PERIMETER (m)		
RISE	SPAN (mm)	
	3660	4270
1.22	5.15	5.80
1.52	5.75	6.40
1.83	6.40	7.00
2.13	7.00	7.60
2.44	7.60	8.20
2.74	8.20	8.80
3.05	8.80	9.40

NOTE: DOES NOT INCLUDE CHANNEL BOTTOM

CENTRE OF MASS-y (mm)		
RISE	SPAN (mm)	
	3660	4270
1.22	1040	1068
1.52	1214	1250
1.83	1390	1432
2.13	1566	1614
2.44	1742	1796
2.74	1920	1978
3.05	2098	2160

CONSPAN® CANADA

CON/SPAN
SHORT SPAN SERIES

FIGURE 4-1

F-04-1R0 REV 00 JUNE 2001